HANLEY CONTROLS
CLONMEL
www.hccl.ie

FCL IN-LINE SUCTION FILTERS, WITH PAPER CARTRIDGE	PG.	5.01 ÷ 5.02
PAPER FILTERING CARTRIDGES FOR FCL FILTERS	PG.	5.02
FB SUCTION FILTER WITH METAL CARTRIDGE	PG.	5.03 ÷ 5.10
STAINLESS STEEL MESH FILTERING CARTRIDGES FOR FB FILTERS	PG.	5.11
FC SUCTION FILTERS WITH PAPER CARTRIDGE	PG.	5.12 ÷ 5.15
PAPER FILTERING CARTRIDGES FOR FC FILTERS	PG.	5.16 ÷ 5.17
FO OIL-BATH SUCTION FILTERS	PG.	5.18
STEEL WOOL FILTERING CARTRIDGES FOR FO FILTERS	PG.	5.19
FO LONG OPERATION AUTONOMY OIL-BATH SUCTION FILTERS	PG.	5.20
FS SYPHON SUCTION FILTERS	PG.	5.21
SYPHON FILTER SYSTEM WITH AUTOMATIC BY-PASS FS 50 BP	PG.	5.22
SPECIAL FILTERS	PG.	5.23
FP SERIES FILTERING CARTRIDGE CONTAINERS WITH COMPRESSION SEALING	PG.	5.24
FILTERING CARTRIDGES WITH COMPRESSION SEALING	PG.	5.25
FM SERIES QUICK COUPLING FILTERING CARTRIDGE CONTAINERS	PG.	5.26
FK SERIES QUICK COUPLING FILTERING CARTRIDGE CONTAINERS	PG.	5.27
QUICK COUPLING FILTERING CARTRIDGES	PG.	5.28

3D drawings are available on **vuototecnica.net**

3D drawings are available on **vuototecnica.net**

FCL IN-LINE SUCTION FILTERS, WITH PAPER CARTRIDGE

These small in-line filters retain impurities and very fine dust, interfering with the flow rate in a negligible manner. Thanks to their reduced size, they can be directly installed onto vacuum piping, close to the utilities (vacuum cups, vacuum clamping systems, etc.) for a fractionated filtration and a better visual control of all the plant suction points.
They are composed of a cylindrical transparent Plexiglass body closed by two anodised aluminium flanges kept in place by Seeger rings, where all the threaded male or female connections and seals are located. Inside there is a filtering cartridge with a filtering degree equal to 7 µ, which is made with a special treated paper that is pleated to increase the filtering surface. The filters can be inspected by simply removing one of the two flanges. Due to the paper filtering element, these filters are not recommended in presence of water or oil vapours or condensations.

Technical features

Operating pressure: from 0.5 to 3000 absolute mbar
Fluid temperature: from -20 to +60°C
Level of filtration: 7 µ

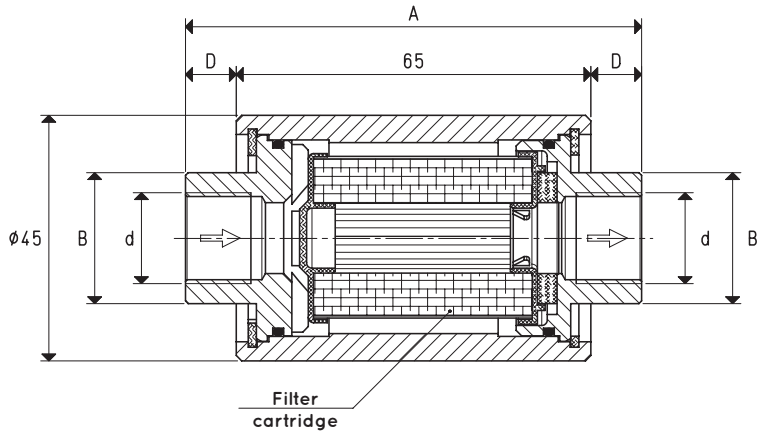

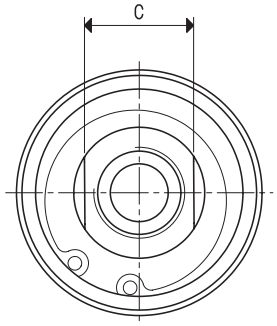

Item	d Ø	A	B Ø	C	D	Flow rate max m³/h	Cartridge spare part item	Sealing kit spare part item	Weight g
FCL 1	G1/4"	79.2	20.0	17	7.1	7.5	00 FCL 03	00 KIT FCL 1	120
FCL 2	G3/8"	83.6	24.0	20	9.3	20.0	00 FCL 03	00 KIT FCL 1	136
FCL 3	G1/2"	89.6	26.5	24	12.3	25.0	00 FCL 03	00 KIT FCL 1	152

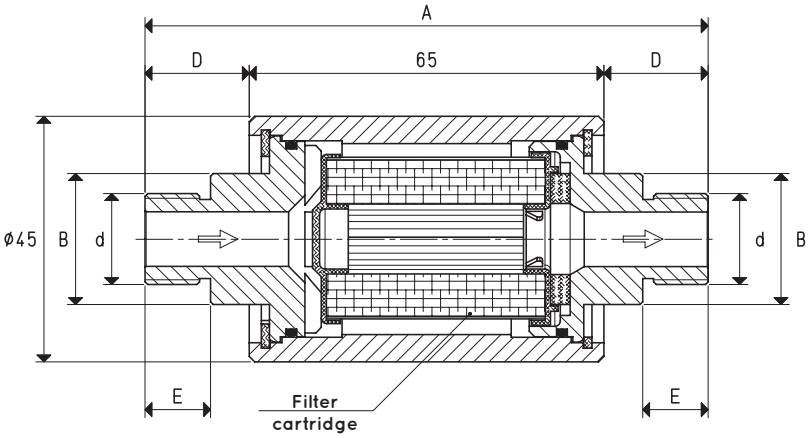

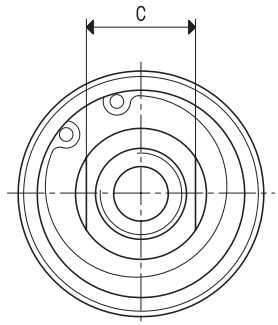

Item	d Ø	A	B Ø	C	D	E	Flow rate max m³/h	Cartridge spare part item	Sealing kit spare part item	Weight g
FCL 1 M	G1/4"	103.2	20.0	17	19.1	12	7.5	00 FCL 03	00 KIT FCL 1	122
FCL 2 M	G3/8"	103.2	24.0	20	19.1	12	20.0	00 FCL 03	00 KIT FCL 1	138
FCL 3 M	G1/2"	113.6	26.5	24	24.3	15	25.0	00 FCL 03	00 KIT FCL 1	154

Transformation ratio: N (newton) = Kg x 9.81 (force of gravity) inch = $\frac{mm}{25.4}$; pounds = $\frac{g}{453.6}$ = $\frac{Kg}{0.4536}$ Adapters for GAS - NPT threading available on page 1.130

3D drawings are available on **vuototecnica.net**

3D drawings are available on vuototecnica.net

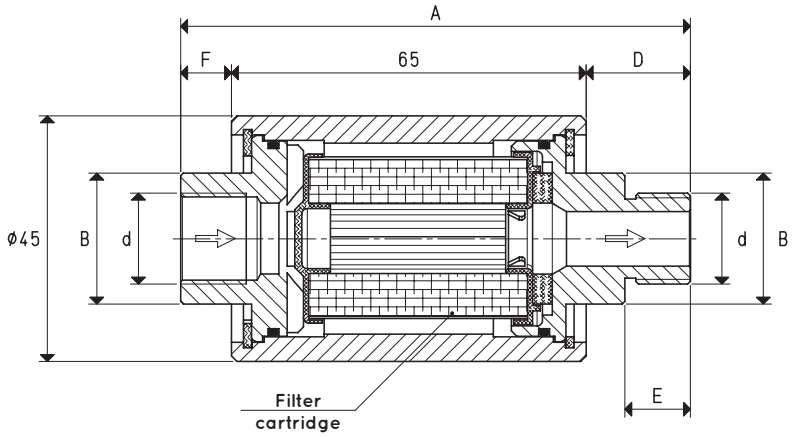

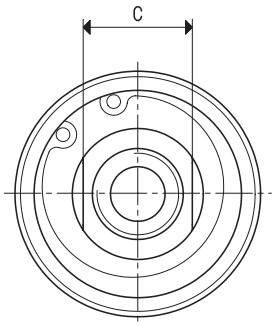

Item	d Ø	A	B Ø	C	D	E	F	Flow rate max m³/h	Cartridge spare part item	Sealing kit spare part item	Weight g
FCL 1 MF	G1/4"	91.2	20.0	17	19.1	12	7.1	7.5	00 FCL 03	00 KIT FCL 1	120
FCL 2 MF	G3/8"	93.4	24.0	20	19.1	12	9.3	20	00 FCL 03	00 KIT FCL 1	136
FCL 3 MF	G1/2"	101.6	26.5	24	24.3	15	12.3	25	00 FCL 03	00 KIT FCL 1	152

PAPER FILTERING CARTRIDGES FOR FCL FILTERS

The cartridges described below are suited for FCL filters.
They are made with a special treated paper with a filtering degree equal to 7 µ, which is pleated in order to increase its surface and wrapped on two flanges in plastic material.
They are recommended for retaining impurities and fine dust, but not in presence of water or oil vapours or condensations.

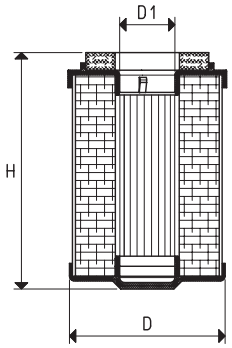

Item	For filter item	D Ø	D1 Ø	H	Level of filtration micron
00 FCL 03	FCL 1 - FCL 2 - FCL 3 FCL 1 M - FCL 2 M - FCL 3 M FCL 1 MF - FCL 2 MF - FCL 3 MF	31	10	47	5 ÷ 7

Transformation ratio: N (newton) = Kg x 9.81 (force of gravity) inch = $\frac{mm}{25.4}$; pounds = $\frac{g}{453.6}$ = $\frac{Kg}{0.4536}$ Adapters for GAS - NPT threading available on page 1.130

FB SUCTION FILTER WITH METAL CARTRIDGE

Preventing impurities from reaching the vacuum pump is fundamental to guarantee the correct operation and long duration.
This range of filters, to be placed on the vacuum pump suction inlet or on the plant pipeline, has been designed for this purpose. Their simple and rational structure features threaded connections for the installation and a lid, very easy to open, to allow easily cleaning the filtering cartridge. The lids are made with die-cast aluminium, as are the containers, except for the models FB 5, FB 10 e FB 20 which are in transparent plastic material (cellulose acetate), particularly resistant to shocks.
The standard filtering cartridges are in profiled stainless steel mesh, with a filtering degree equal to 60 µ. Upon request, they can be supplied with a filtering degree equal to 100 or 300 µ.
The flow rate of these filters ranges from 5 to 300 m^3/h.

Technical features

Operating pressure: from 0.5 to 3000 absolute mbar
Fluid temperature: from -20 to +90°C for filters with aluminium container, from -20 to +50°C for filters with containers in transparent plastic material
Level of filtration: 60 µ

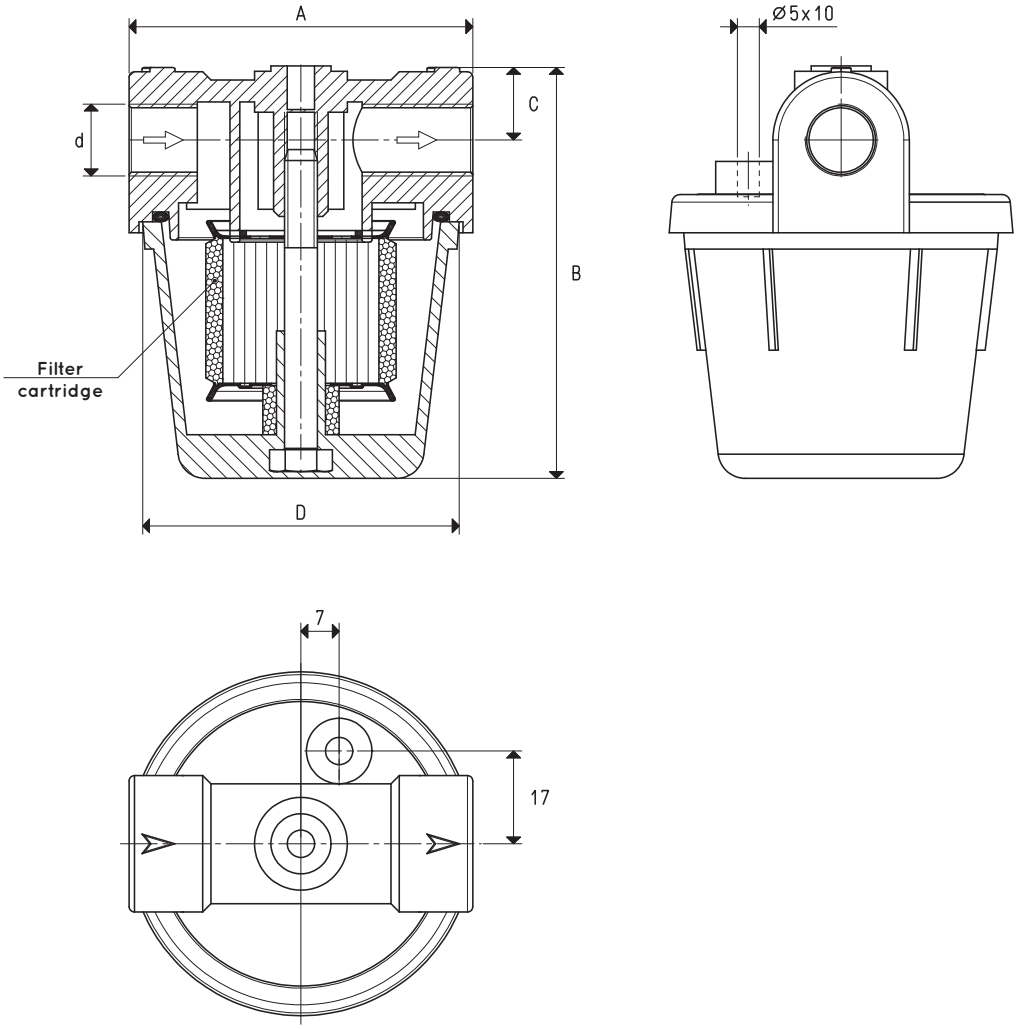

Item	d	A	B	C	D	Flow rate max	Cartridge spare part	Sealing kit spare part	Weight
	Ø				Ø	m^3/h	item	item	g
FB 5	G1/4"	63	75.3	12.5	59	5	00 FB 03	00 KIT FB5	140

Transformation ratio: N (newton) = Kg x 9.81 (force of gravity) inch = $\frac{mm}{25.4}$; pounds = $\frac{g}{453.6}$ = $\frac{Kg}{0.4536}$

Adapters for GAS - NPT threading available on page 1.130

3D drawings are available on vuototecnica.net

FB SUCTION FILTER WITH METAL CARTRIDGE

3D drawings are available on **vuototecnica.net**

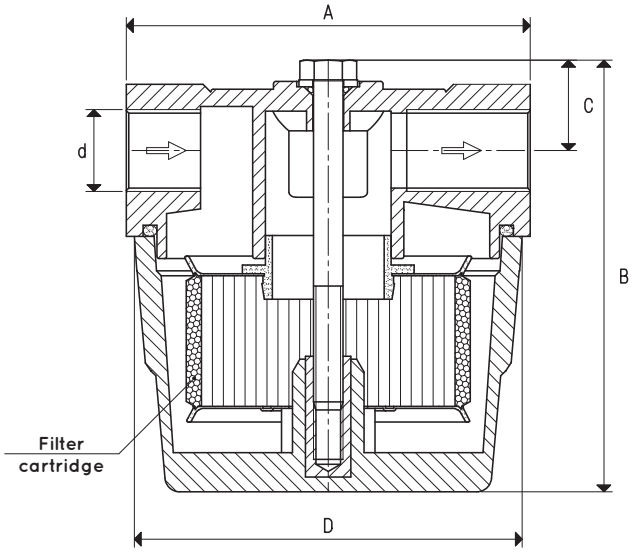

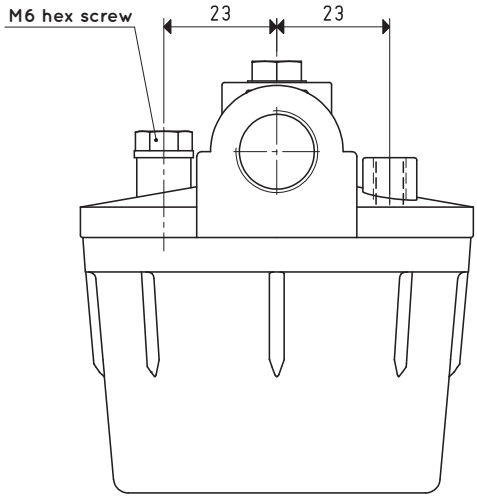

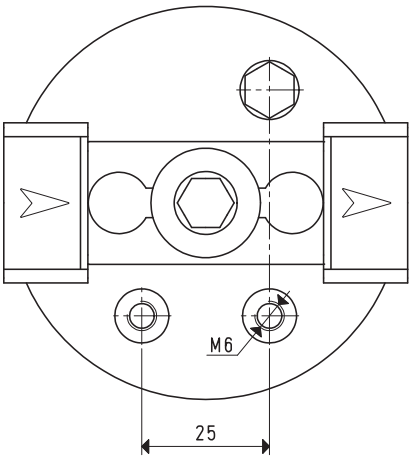

Item	d Ø	A	B	C	D Ø	Flow rate max m³/h	Cartridge spare part item	Sealing kit spare part item	Weight g
FB 10	G3/8"	81	87	17	79	10	00 FB 13	00 KIT FB10	258

Transformation ratio: N (newton) = Kg x 9.81 (force of gravity) inch = $\frac{mm}{25.4}$; pounds = $\frac{g}{453.6}$ = $\frac{Kg}{0.4536}$ Adapters for GAS - NPT threading available on page 1.130

FB SUCTION FILTER WITH METAL CARTRIDGE

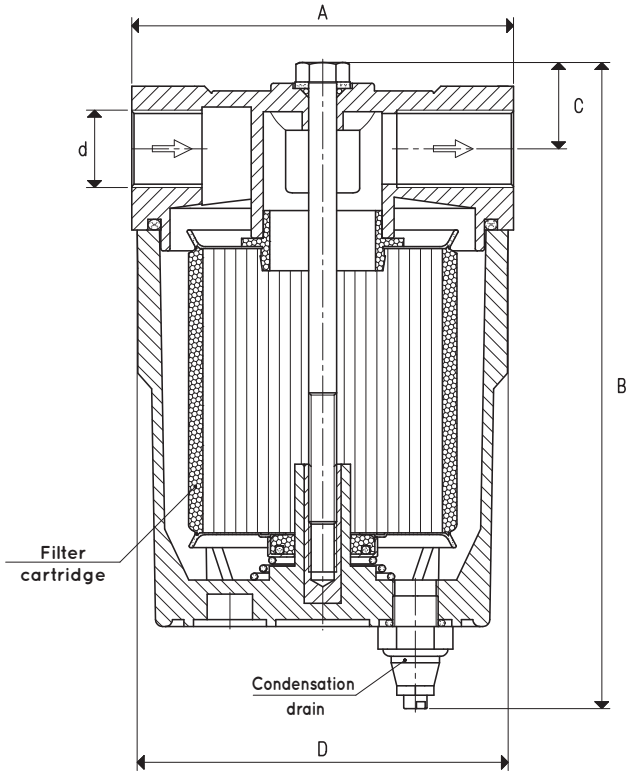

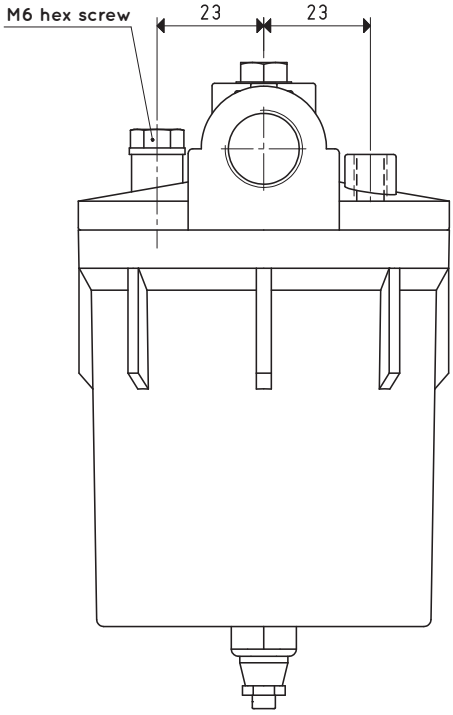

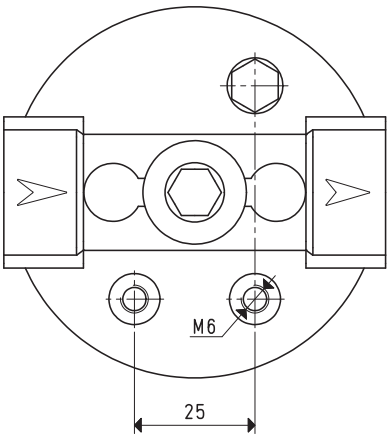

Item	d Ø	A	B	C	D Ø	Flow rate max m³/h	Cartridge spare part item	Sealing kit and small parts item	Weight g
FB 20	G1/2"	81	116	17	79	20	00 FB 22	00 KIT FB20	312

Transformation ratio: N (newton) = Kg x 9.81 (force of gravity) inch = $\frac{mm}{25.4}$; pounds = $\frac{g}{453.6}$ = $\frac{Kg}{0.4536}$ Adapters for GAS - NPT threading available on page 1.130

FB SUCTION FILTER WITH METAL CARTRIDGE

3D drawings are available on **vuototecnica.net**

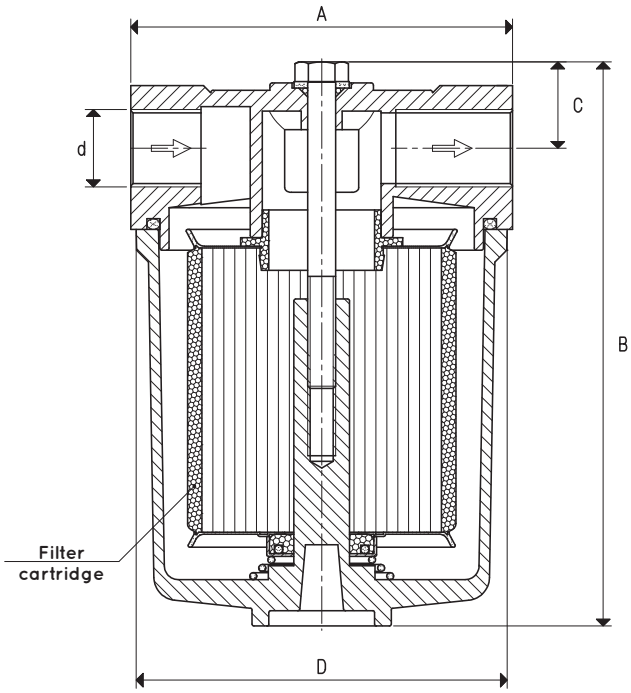

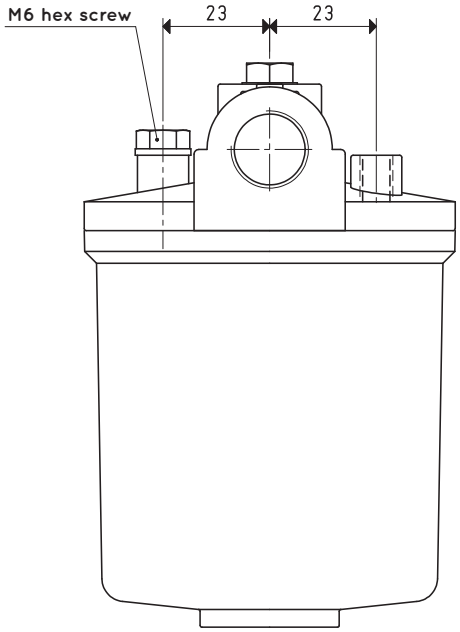

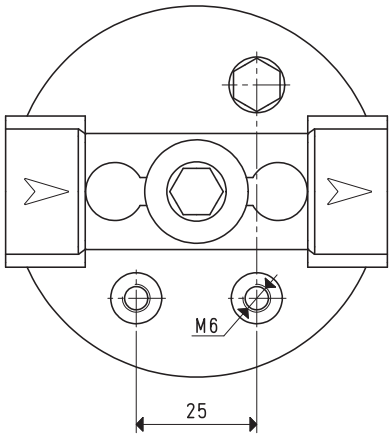

Item	d Ø	A	B	C	D Ø	Flow rate max m³/h	Cartridge spare part item	Sealing kit and small parts item	Weight g
FB 20 A	G1/2"	81	121	17	79	20	00 FB 22	00 KIT FB20	394

Transformation ratio: N (newton) = Kg x 9.81 (force of gravity) inch = $\frac{mm}{25.4}$; pounds = $\frac{g}{453.6}$ = $\frac{Kg}{0.4536}$ Adapters for GAS - NPT threading available on page 1.130

FB SUCTION FILTER WITH METAL CARTRIDGE

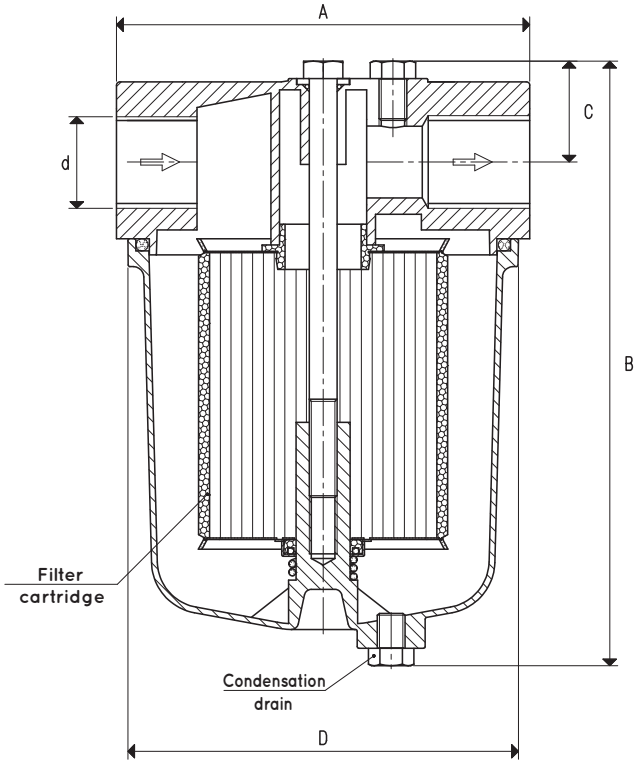

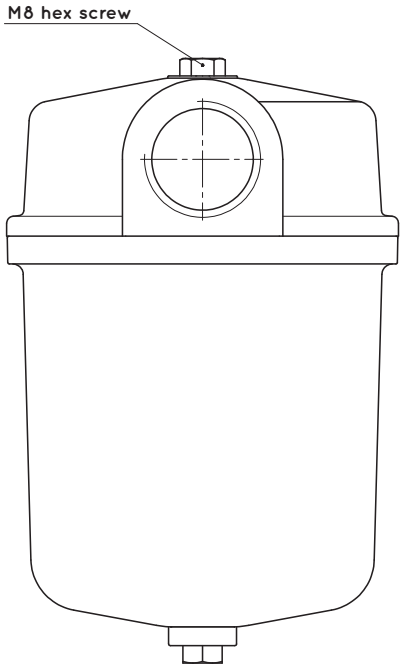

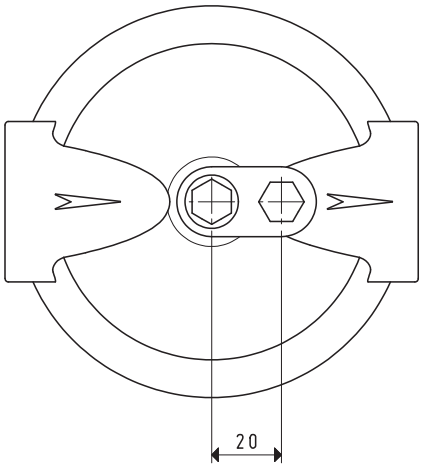

Item	d Ø	A	B	C	D Ø	Flow rate max m³/h	Cartridge spare part item	Sealing kit and small parts item	Weight g
FB 28	G3/4"	120	181	31	112	40	00 FB 34	00 KIT FB 30	762

Transformation ratio: N (newton) = Kg x 9.81 (force of gravity) inch = $\frac{mm}{25.4}$; pounds = $\frac{g}{453.6}$ = $\frac{Kg}{0.4536}$ Adapters for GAS - NPT threading available on page 1.130

FB SUCTION FILTER WITH METAL CARTRIDGE

3D drawings are available on **vuototecnica.net**

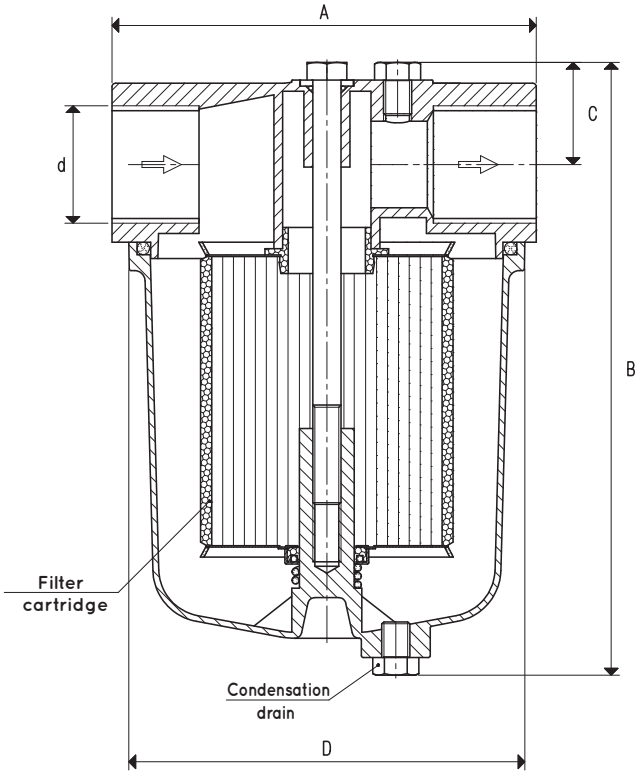

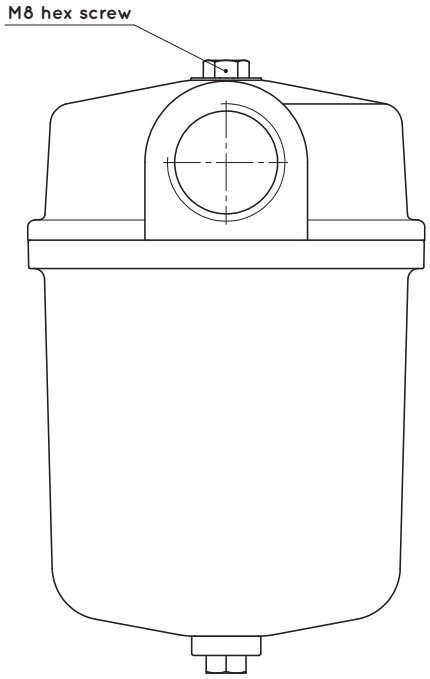

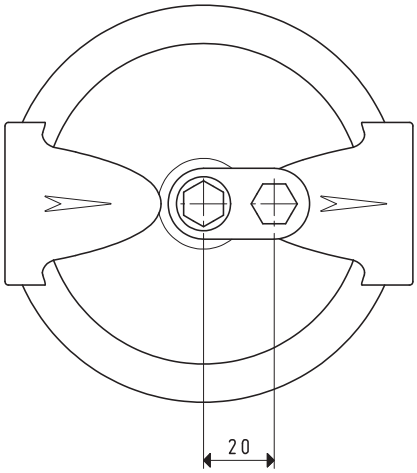

Item	d Ø	A	B	C	D Ø	Flow rate max m³/h	Cartridge spare part item	Sealing kit and small parts item	Weight g
FB 30	G1"	120	181	31	112	70	00 FB 34	00 KIT FB 30	758

Transformation ratio: N (newton) = Kg x 9.81 (force of gravity) inch = $\frac{mm}{25.4}$; pounds = $\frac{g}{453.6}$ = $\frac{Kg}{0.4536}$ Adapters for GAS - NPT threading available on page 1.130

FB SUCTION FILTER WITH METAL CARTRIDGE

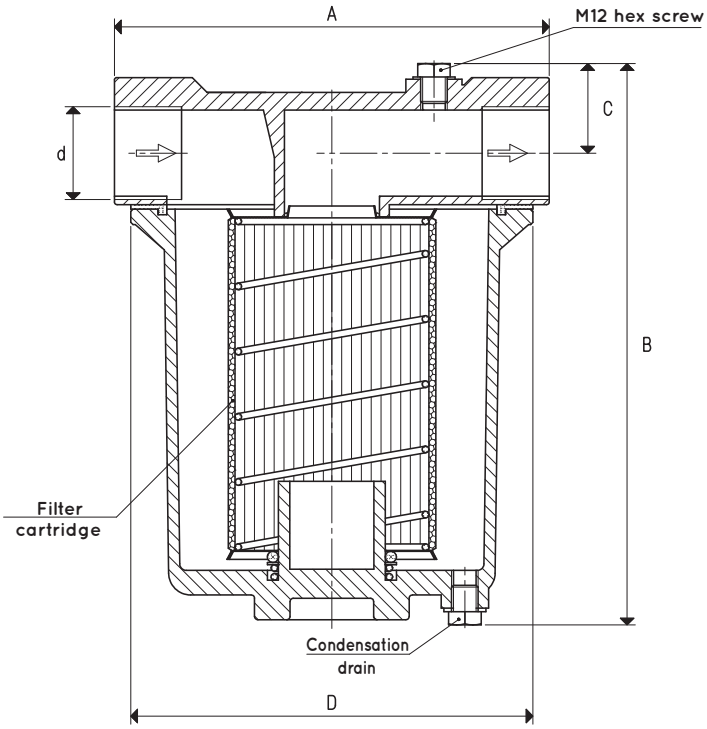

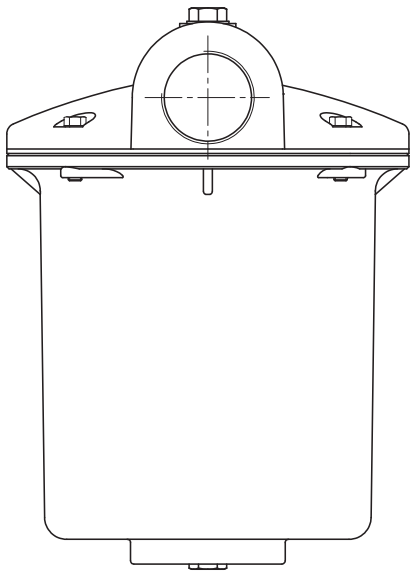

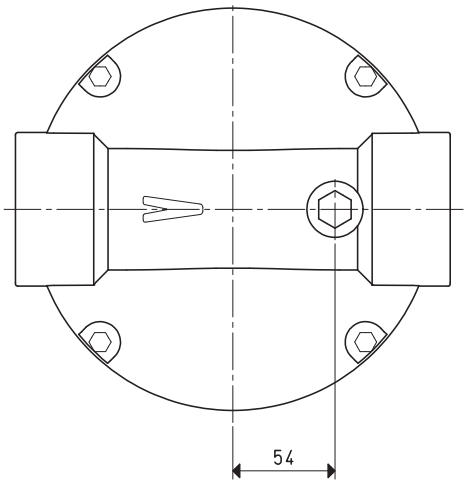

Item	d Ø	A	B	C	D Ø	Flow rate max m³/h	Cartridge spare part item	Sealing kit and small parts item	Weight g
FB 40	G1" 1/4	190	255	39	182	150	00 FB 45	00 KIT FB 40	3.06
FB 50	G1" 1/2	190	255	39	182	200	00 FB 45	00 KIT FB 50	2.99

Transformation ratio: N (newton) = Kg x 9.81 (force of gravity) inch = $\frac{mm}{25.4}$; pounds = $\frac{g}{453.6}$ = $\frac{Kg}{0.4536}$ Adapters for GAS - NPT threading available on page 1.130

3D drawings are available on vuototecnica.net

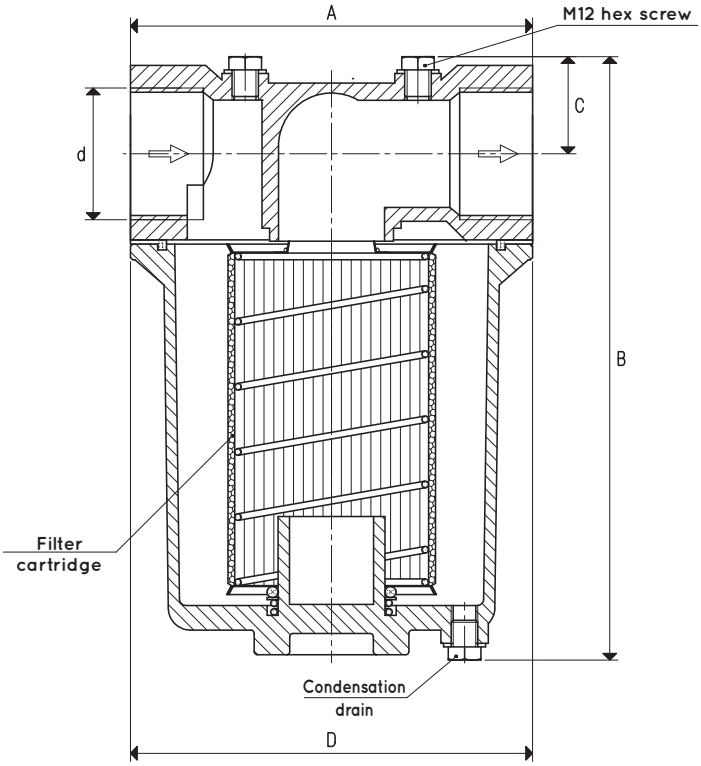

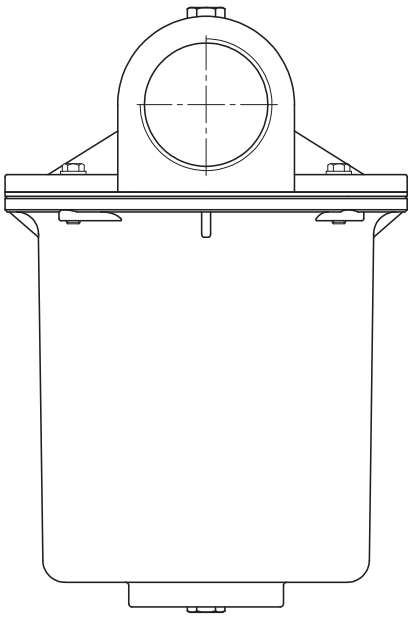

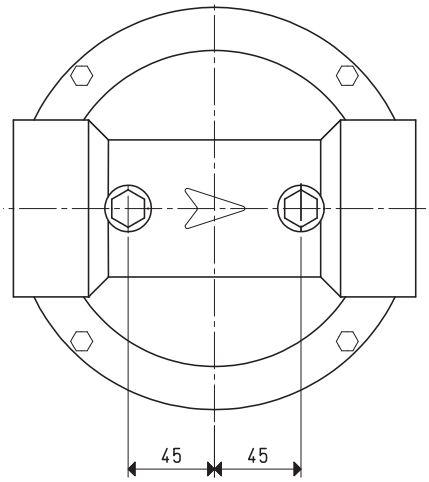

Item	d Ø	A	B	C	D Ø	Flow rate max m^3/h	Cartridge spare part item	Sealing kit and small parts item	Weight g
FB 60	G2"	182	260	42	182	300	00 FB 52	00 KIT FB 60	3.18

Transformation ratio: N (newton) = Kg x 9.81 (force of gravity) inch = $\frac{mm}{25.4}$; pounds = $\frac{g}{453.6}$ = $\frac{Kg}{0.4536}$ Adapters for GAS - NPT threading available on page 1.130

STAINLESS STEEL MESH FILTERING CARTRIDGES FOR FB FILTERS

The cartridges described on this page are suited for FB suction filters. The standard ones are made with profiled stainless steel mesh with a filtering degree equal to 60 µ.
Upon request, the same cartridges can be supplied with a filtering degree equal to 100 or 300 µ.
They are recommended for retaining impurities even in presence of water and oil vapours or condensations, but not for retaining fine and impalpable dust.

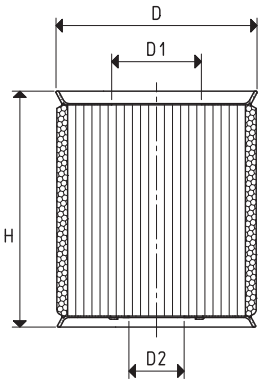

Item	For filter item	D Ø	D1 Ø	D2 Ø	H	Level of filtration micron
00 FB 03	FB 5	35	6	10.0	34	60
00 FB 13	FB 10	58	16	25.5	34	60
00 FB 22	FB 20 - FB 20A	58	16	25.5	67	60
00 FB 34	FB 28 - FB 30	74	16	25.5	87	60

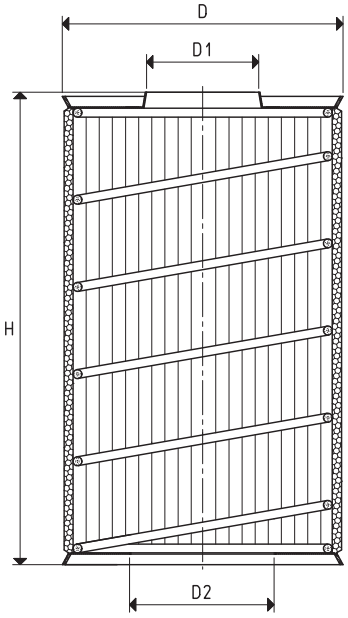

Item	For filter item	D Ø	D1 Ø	D2 Ø	H	Level of filtration micron
00 FB 45	FB 40 - FB 50	95	39	49	160	60
00 FB 52	FB 60	95	51	56	160	60

Note: Upon request, the same cartridges can be supplied with a filtering degree equal to 100 or 300 µ.

Transformation ratio: N (newton) = Kg x 9.81 (force of gravity) inch = $\frac{mm}{25.4}$; pounds = $\frac{g}{453.6} = \frac{Kg}{0.4536}$

FC SUCTION FILTERS WITH PAPER CARTRIDGE

These filters have been designed to allow vacuum pumps to operate even in very dusty environments. Installed onto the pump suction inlet, they are able to retain fine and impalpable dust interfering with the flow rate in a negligible manner.
The filtering cartridge is made with a special treated paper with a filtering degree equal to 5 - 7 μ, which is pleated to increase its surface and is contained in a double perforated sheet steel enclosure. The filtering cartridge container as well as the lid are made with sheet steel and varnished with a special anti-oxidation paint.
A seal located between the lid and the container guarantees a perfect vacuum seal between the two elements. The release clamps applied onto the container allow a quick opening of the lid for the filtering cartridge inspection or replacement.
Due to the paper filtering element, these filters are not recommended in presence of water or oil vapours or condensations.

Technical features

Operating pressure: from 0.5 to 2000 absolute mbar
Fluid temperature: from -20 to +60 °C
Level of filtration: 5 - 7 μ

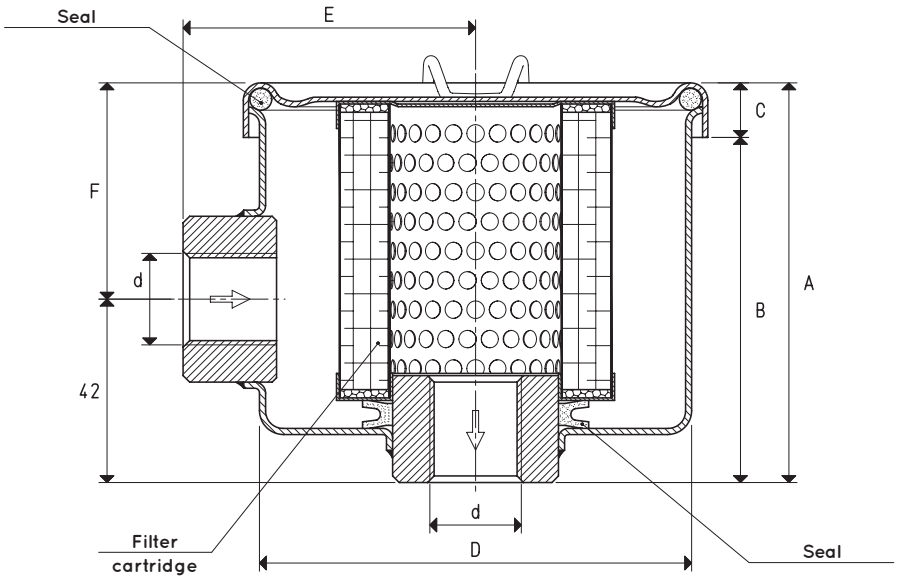

Item	d Ø	A	B	C	D Ø	E	F	Flow rate max m³/h	Cartridge spare part item	Sealing kit spare part item	Weight g
FC 10	G3/8"	79	70	9	72	49	37	15	00 FC 04	00 KIT FC 10	352
FC 20	G1/2"	93	80	13	96	67	51	30	00 FC 08	00 KIT FC 20	774
FC 25	G3/4"	93	80	13	96	67	51	50	00 FC 08	00 KIT FC 25	734

Transformation ratio: N (newton) = Kg x 9.81 (force of gravity) inch = $\frac{mm}{25.4}$; pounds = $\frac{g}{453.6}$ = $\frac{Kg}{0.4536}$ Adapters for GAS - NPT threading available on page 1.130

3D drawings are available on **vuototecnica.net**

3D drawings are available on vuototecnica.net

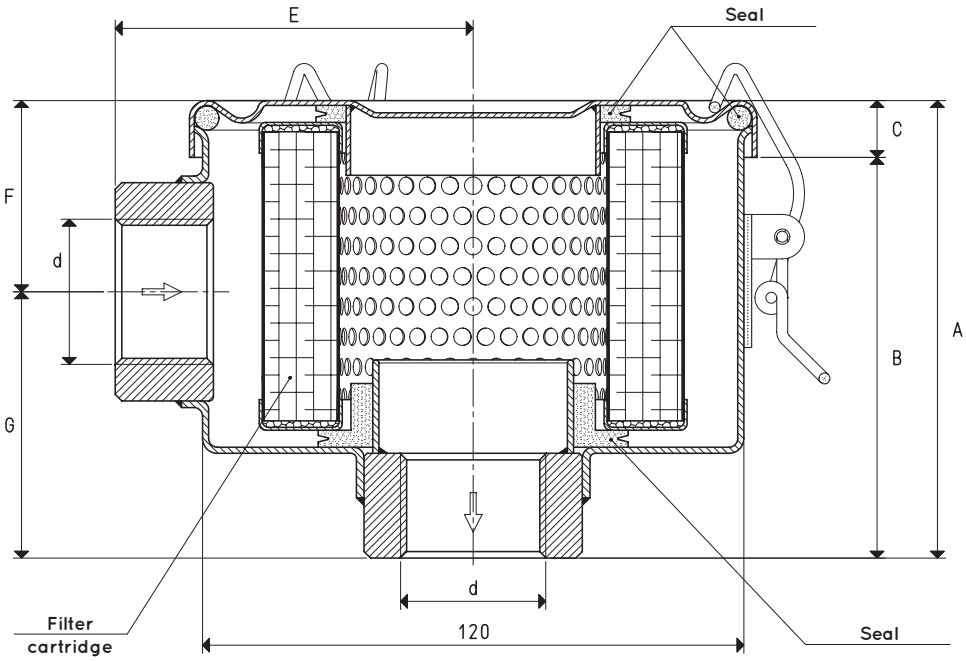

Item	d Ø	A	B	C	E	F	G	Flow rate max m³/h	Cartridge spare part item	Sealing kit spare part item	Weight Kg
FC 30	G1"	105	92	13	84	41	64	90	00 FC 15	00 KIT FC 30	1.17
FC 35	G1" 1/4	97	84	13	78	46	51	100	00 FC 15	00 KIT FC 35	1.02
FC 38	G1" 1/2	101	88	13	80	45	56	200	00 FC 15	00 KIT FC 38	0.95
FC 55	G2"	170	157	13	81	79	91	300	00 FC 33	00 KIT FC 55	1.29

Transformation ratio: N (newton) = Kg x 9.81 (force of gravity) inch = $\frac{mm}{25.4}$; pounds = $\frac{g}{453.6}$ = $\frac{Kg}{0.4536}$ Adapters for GAS - NPT threading available on page 1.130

3D drawings are available on **vuototecnica.net**

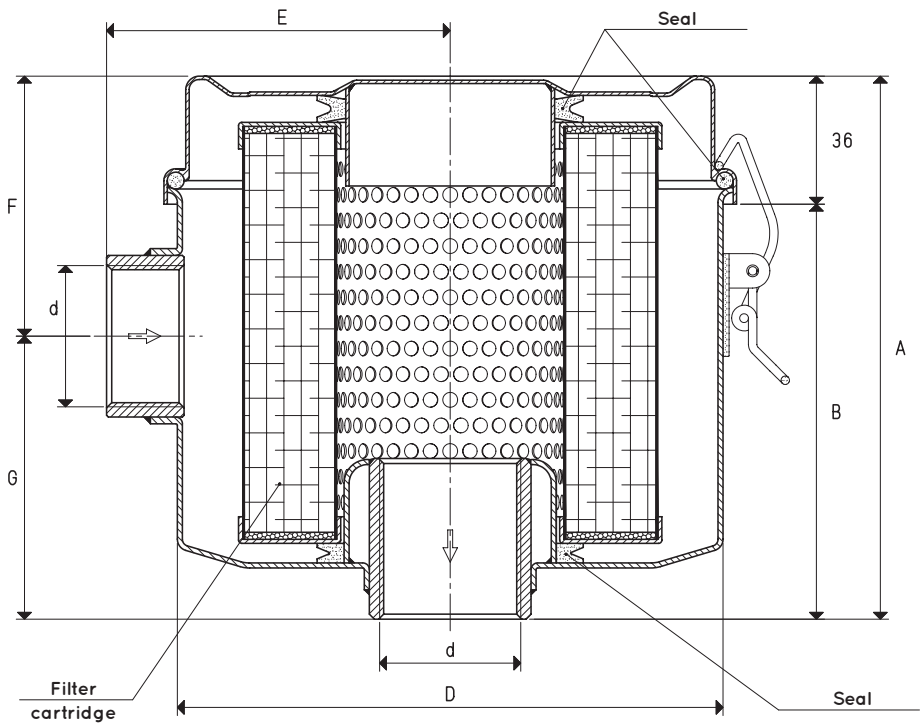

Item	d Ø	A	B	D Ø	E	F	G	Flow rate max m³/h	Cartridge spare part item	Sealing kit spare part item	Weight Kg
FC 40	G1" 1/4	161	125	162	102	77	84	150	00 FC 22	00 KIT FC 40	1.83
FC 50	G1" 1/2	197	161	160	100	85	112	200	00 FC 24	00 KIT FC 50	2.11

Transformation ratio: N (newton) = Kg x 9.81 (force of gravity) inch = $\frac{mm}{25.4}$; pounds = $\frac{g}{453.6}$ = $\frac{Kg}{0.4536}$ Adapters for GAS - NPT threading available on page 1.130

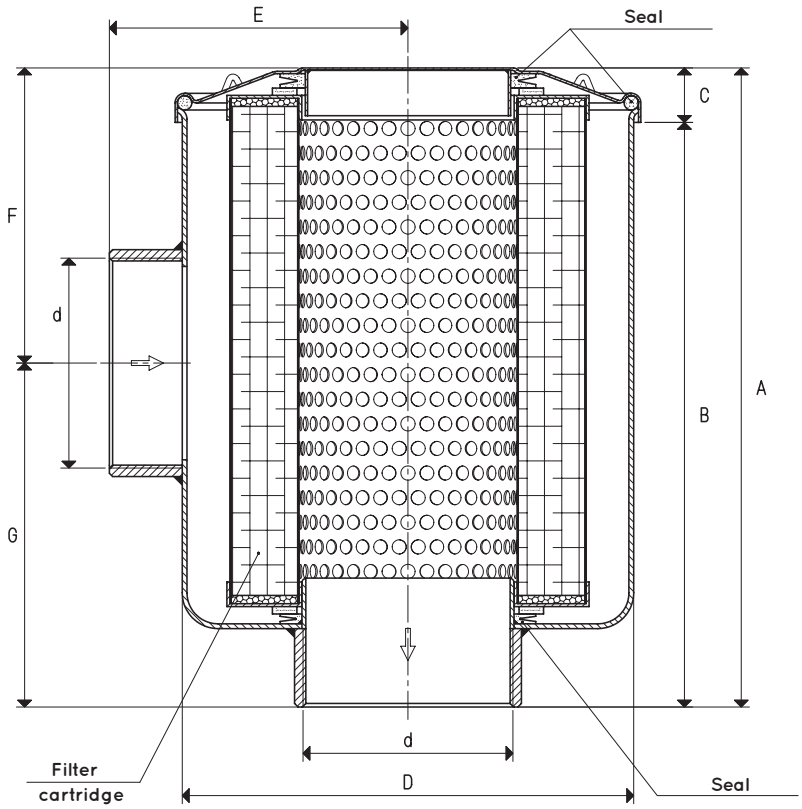

Item	d Ø	A	B	C	D Ø	E	F	G	Flow rate max m³/h	Cartridge spare part item	Sealing kit spare part item	Weight Kg
FC 60	G2"	258	235	23	185	115	126	132	300	00 FC 29	00 KIT FC 60	4.62
FC 80	G3"	270	246	24	185	125	126	144	360	00 FC 29	00 KIT FC 80	3.45
FC 100	G4"	336	311	25	295	166	134	202	540	00 FC 34	00 KIT FC 100	5.56

Transformation ratio: N (newton) = Kg x 9.81 (force of gravity) inch = $\frac{mm}{25.4}$; pounds = $\frac{g}{453.6}$ = $\frac{Kg}{0.4536}$ Adapters for GAS - NPT threading available on page 1.130

PAPER FILTERING CARTRIDGES FOR FC FILTERS

The cartridges described on this page are suited for FC suction filters. They are made with a special treated paper with a filtering degree equal to 5 - 7 µ, which is pleated to increase its surface and is contained in a double perforated sheet steel enclosure.
They are recommended for retaining fine and impalpable dust, but not in presence of water and oil vapours and condensation.

3D drawings are available on **vuototecnica.net**

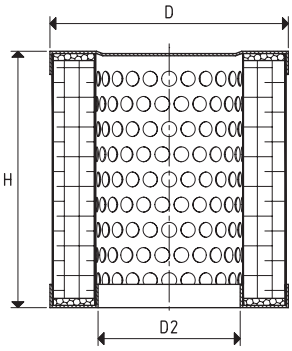

Item	For filter item	D Ø	D2 Ø	H	Level of filtration micron
00 FC 04	FC 10	50	23	59	5 ÷ 7
00 FC 08	FC 20 - FC 25	64	38	69	5 ÷ 7

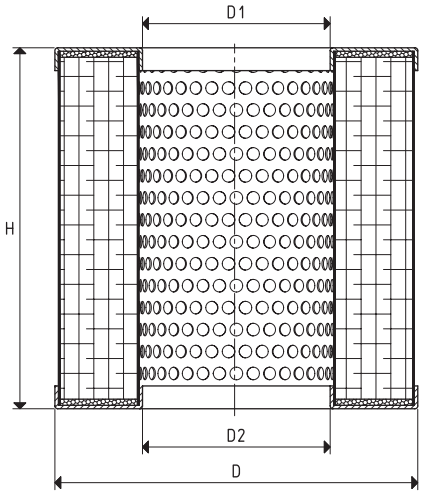

Item	For filter item	D Ø	D1 Ø	D2 Ø	H	Level of filtration micron
00 FC 15	FC 30 - FC 35 - FC 38	98	60	60	70	5 ÷ 7
00 FC 22	FC 40	126	64	64	125	5 ÷ 7
00 FC 24	FC 50	126	64	64	156	5 ÷ 7
00 FC 33	FC 55	98	60	60	140	5 ÷ 7

Transformation ratio: N (newton) = Kg x 9.81 (force of gravity) inch = $\frac{mm}{25.4}$; pounds = $\frac{g}{453.6}$ = $\frac{Kg}{0.4536}$

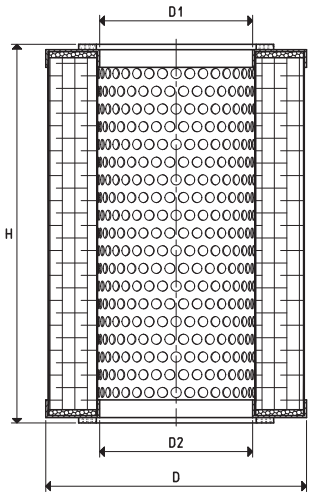

Item	For filter item	D Ø	D1 Ø	D2 Ø	H	Level of filtration micron
00 FC 29	FC 60 - FC 80	152	89	89	215	5 ÷ 7

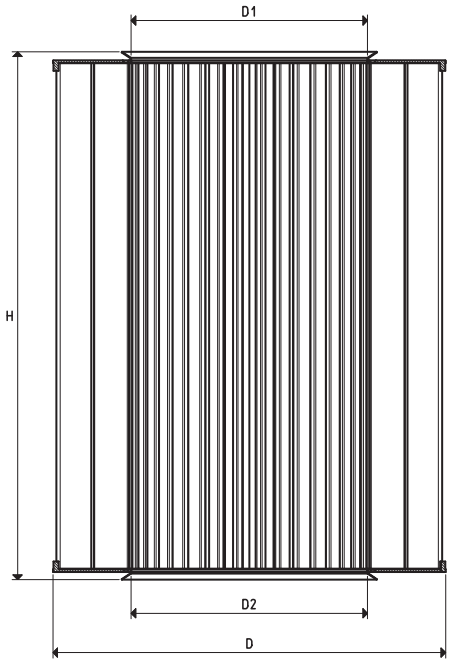

Item	For filter item	D Ø	D1 Ø	D2 Ø	H	Level of filtration micron
00 FC 34	FC 100	227	178	178	278	5 ÷ 7

Transformation ratio: N (newton) = Kg x 9.81 (force of gravity)

inch = $\frac{mm}{25.4}$; pounds = $\frac{g}{453.6}$ = $\frac{Kg}{0.4536}$

FO OIL-BATH SUCTION FILTERS

In presence of a considerable amount of fine or impalpable dust, the traditional suction filter would require a cartridge with a filtering degree so high that, along with reducing its operation autonomy, it would also reduce the vacuum pump suction flow rate.
Oil-bath suction filters have been studied in order to overcome this problem.
The main feature of these filters is the ability to retain the smallest and most impalpable dust particles, without reducing the vacuum pump suction flow rate.
Oil-bath filters are composed of a sheet steel head and container coupled with an interposed seal and clamped by release clamps.
Inside, besides the oil bowl, there are two steel wool filtering cartridges, one of which is detachable and washable, while the other is fixed. The release clamps guarantee easy access for cleaning operations.
They can be used with any kind of oil, even drain oil, as long as it has a minimum viscosity degree. The ideal oil is the same one used for the pump.
Oil-bath suction filters are not recommended for dry vacuum pumps.
They are currently available for capacities up to 300 m^3/h.

Technical features

Operating pressure: from 0.5 to 2000 absolute mbar
Fluid temperature: from -20 to +90 °C
Level of filtration: ≤1 μ

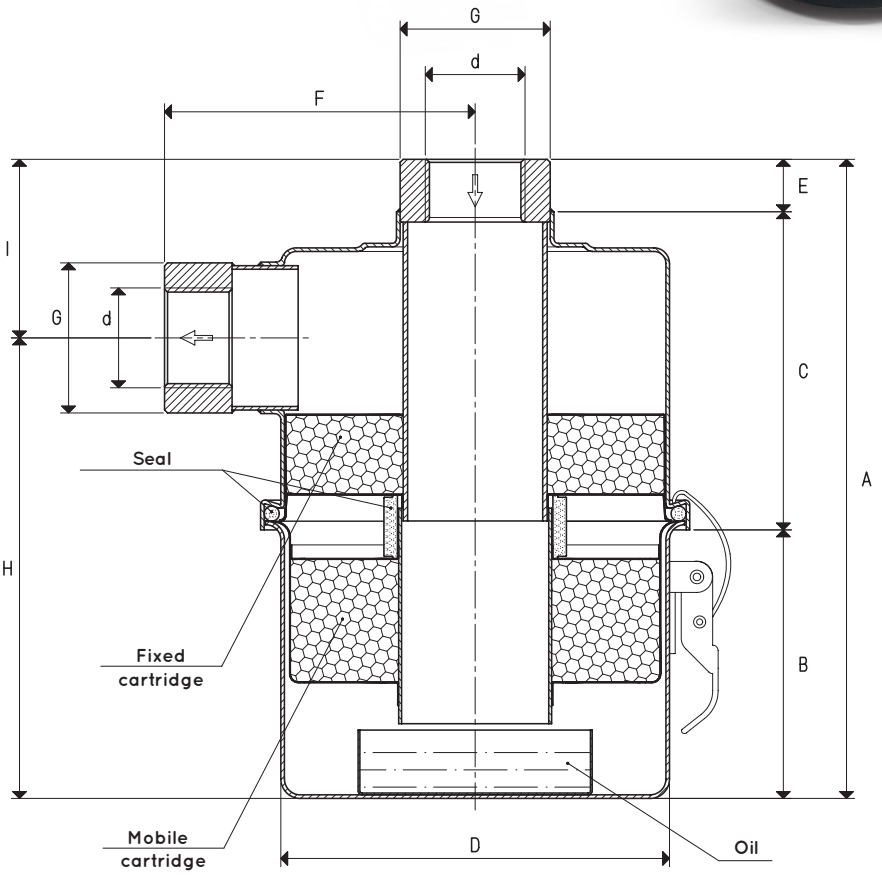

Item	d Ø	A	B	C	D Ø	E	F	G Ø	H	I	Flow rate max m^3/h	Cartridge spare part item	Sealing kit spare part item	Weight Kg
FO 20	G1/2"	205	85	112	106	8	100	40	156	49	30	00 FO 04	00 KIT FO 20	1.44
FO 30	G1"	210	88	106	129	16	106	50	151	59	90	00 FO 09	00 KIT FO 30	1.84
FO 50	G1" 1/2	305	110	135	160	60	128	60	199	106	200	00 FO 14	00 KIT FO 50	2.76
FO 60	G2"	340	140	140	185	60	142	67	217	123	300	00 FO 19	00 KIT FO 60	3.70

Transformation ratio: N (newton) = Kg x 9.81 (force of gravity) inch = $\frac{mm}{25.4}$; pounds = $\frac{g}{453.6}$ = $\frac{Kg}{0.4536}$ Adapters for GAS - NPT threading available on page 1.130

3D drawings are available on **vuototecnica.net**

STEEL WOOL FILTERING CARTRIDGES FOR FO FILTERS

The cartridges described on this page are suited for FO oil-bath suction filters.
They are made with pressed steel wool contained in a double perforated sheet steel enclosure. Their function is to retain fine or impalpable dust impregnated with the filter oil.

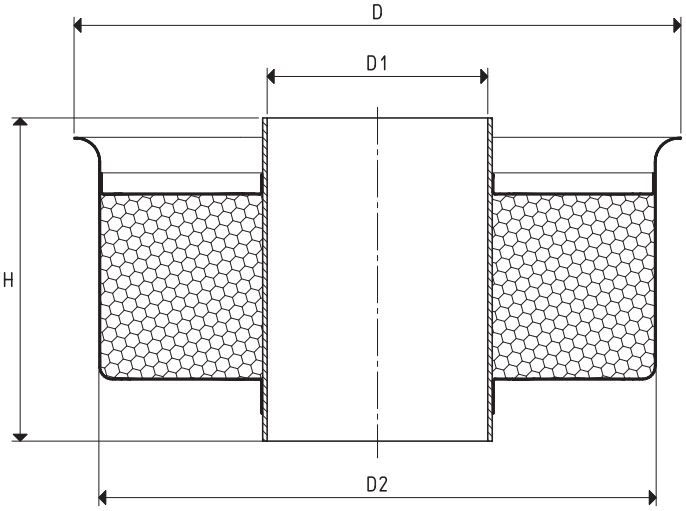

Item	For filter item	D Ø	D1 Ø	D2 Ø	H	Level of filtration (installed on the filter) micron
00 FO 04	FO 20	110	40	103	70	≤1
00 FO 09	FO 30	134	49	127	72	≤1
00 FO 14	FO 50	165	58	155	86	≤1
00 F0 19	FO 60	190	66	180	104	≤1

Transformation ratio: N (newton) = Kg x 9.81 (force of gravity) inch = $\frac{mm}{25.4}$; pounds = $\frac{g}{453.6}$ = $\frac{Kg}{0.4536}$

FO LONG OPERATION AUTONOMY OIL-BATH SUCTION FILTERS

In presence of fine or impalpable dust, the traditional suction filter would require a cartridge with a filtering degree so high that, along with reducing its operation autonomy, it would also reduce the vacuum pump suction flow rate.
Oil-bath suction filters have been studied in order to overcome this problem.
The main feature of these filters, in addition to their high autonomy, is their ability to retain the finest suctioned impalpable dusts without reducing the suction flow rate of the pump.
Oil-bath filters are composed of a sheet steel head and container coupled with an interposed seal and clamped by release clamps.
Inside, besides the oil bowl, there are two steel wool filtering cartridges, one of which is detachable and washable, while the other is fixed. The release clamps guarantee easy access for cleaning operations.
Two visual indicators allow monitoring of the oil level and the degree of clogging.
They can be used with any kind of oil, even drain oil, as long as it has a minimum viscosity degree. The ideal oil is the same one used for the pump.
Oil-bath suction filters are not recommended for dry vacuum pumps.
They are currently available for 200 and 300 m^3/h capacities.

Technical features

Operating pressure: from 0.5 to 2000 absolute mbar
Temperature of fluid: from -20 to +90°C
Level of filtration: ≤1 μ
Quantity of oil: FO 160 - 6.3 L
FO 300 - 12.5 L

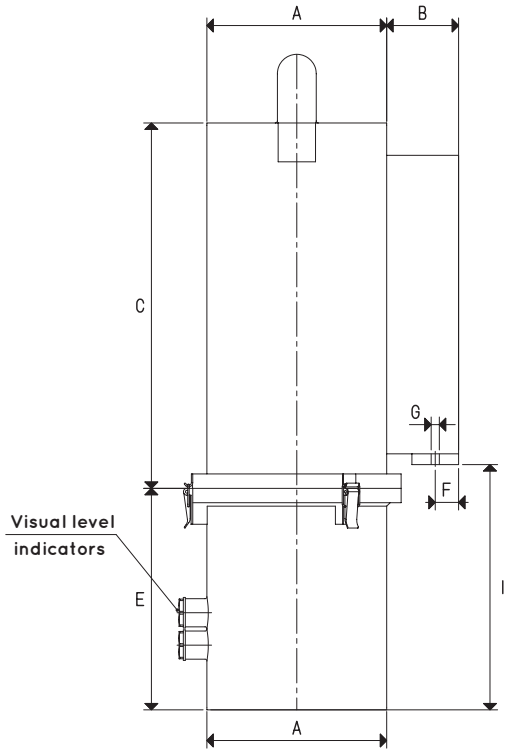

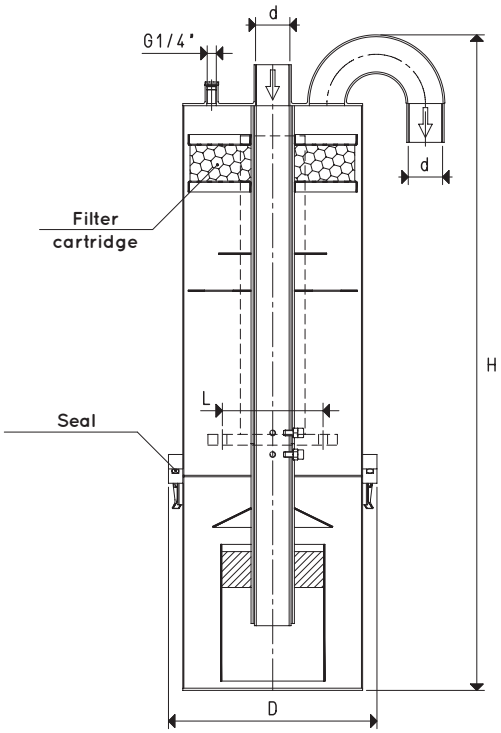

Item	d	A	B	C	D	E	F	G	H	I	L	Flow rate max	Sealing spare part	Weight
	Ø	Ø			Ø			Ø				m^3/h	item	Kg
FO 160	G1" 1/2	250	100	508	290	308	32.5	12	910	356	140	200	00 FO 30	27
FO 300	G2"	350	80	508	390	308	32.5	12	920	356	200	300	00 FO 29	40

Note: Filter cartridges are washable and therefore do not need to be replaced.

Transformation ratio: N (newton) = Kg x 9.81 (force of gravity) inch = $\frac{mm}{25.4}$; pounds = $\frac{g}{453.6}$ = $\frac{Kg}{0.4536}$

Adapters for GAS - NPT threading available on page 1.130

3D drawings are available on **vuototecnica.net**

FS SYPHON SUCTION FILTERS

These filters retain impurities and liquids extracted through vacuum cups or vacuum clamping systems, preventing them from entering into the vacuum pumps.
They are composed of:
- A transparent Plexiglas cylindrical container with an extractable lid to allow inspection and cleaning
- A check valve located on the suction inlet for preventing the air from returning in the filter when the pump is idle
- A stainless steel mesh filtering cartridge with a filtering degree equal to 60 µ, also located on the suction inlet to retain dust and solid impurities
- A two-way manual valve for service vacuum interception.
- A two-way manual valve for restoring the atmospheric pressure inside the filter
- A radial vacuum gauge the direct reading of the level of vacuum
- A magnetic level switch that stops the pump when the suctioned liquid exceeds the safety level
- A rigid pipe connected to the service to convey the air flow and the sucked liquid to the bottom of the container
- A check valve at the bottom of the filter to automatically drain the sucked liquid and impurities every time the atmospheric pressure is restored inside the filter
- A cock applied on the aforementioned check valve for manual liquid drainage
- A sturdy metal bracket for fixing the filter to the wall

Technical features
Operating pressure: from 0.5 to 1000 absolute mbar
Fluid temperature: from -5 to +50°C
Level of filtration: 60 µ

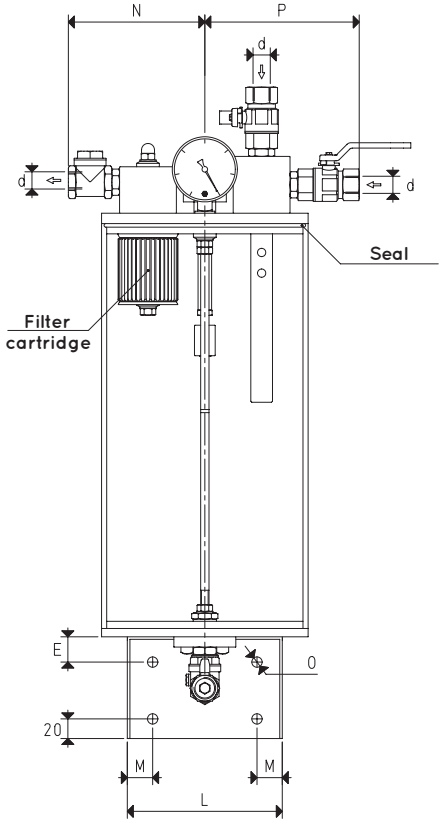

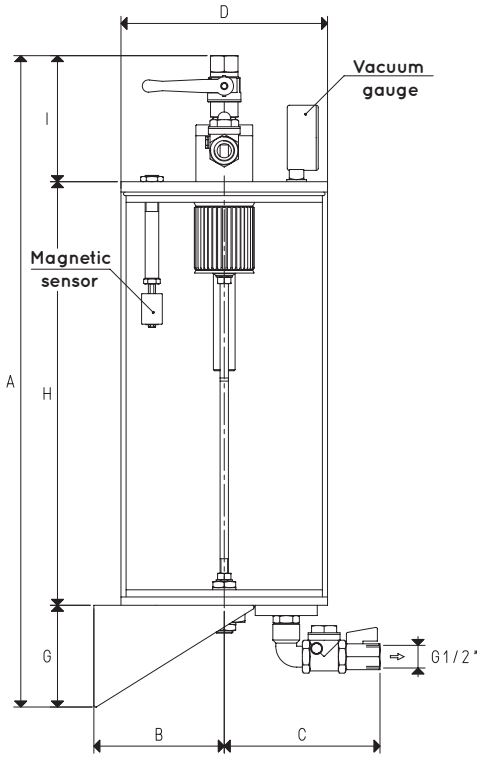

Item	d	A	B	C	D	E	G	H	I	L	M	N	O	P	Flow rate max	Capacity	Cartridge spare part	Vacuum gauge spare part	Sealing spare part	Weight
	Ø				Ø								Ø		m³/h	L	item	item	item	Kg
FS 5	G3/8"	461	130	175	200	25	100	250	111	150	25	140	10	136	10	6.0	00 FB 13	09 05 10	00 FS 36	5.5
FS 10	G3/8"	551	130	175	200	25	100	340	111	150	25	140	10	136	10	8.5	00 FB 13	09 05 10	00 FS 36	6.0
FS 20	G1/2"	630	130	175	200	25	100	410	120	150	25	140	10	145	20	10.5	00 FB 22	09 05 10	00 FS 36	6.8
FS 25	G3/4"	750	150	195	240	25	100	510	140	170	30	170	11	180	40	19.5	00 FB 22	09 05 10	00 FS 36	9.1
FS 30	G1"	890	190	225	300	30	120	610	160	200	40	205	11	220	70	38.0	00 FB 34	09 05 10	00 FS 41	19.2
FS 50	G2"	960	190	225	300	30	120	610	240	200	40	250	11	276	150	38.0	00 FB 45	09 05 10	00 FS 41	22.7

Transformation ratio: N (newton) = Kg x 9.81 (force of gravity) inch = $\frac{mm}{25.4}$; pounds = $\frac{g}{453.6}$ = $\frac{Kg}{0.4536}$ Adapters for GAS - NPT threading available on page 1.130

SYPHON FILTER SYSTEMS WITH AUTOMATIC BY-PASS FS 50 BP and FS 60 BP

The system, composed of two siphon filters, operates initially with suction through filter 1 and with filter 2 excluded. When the suctioned liquid reaches the float on the level switch, automatically by means of the 1" 1/2 three-way vacuum interception solenoid valve for item FS 50 BP and 2" for item FS 60 BP, an exchange is made and suction passes through filter 2.
The input of atmospheric air into filter 1 via the ½" three-way solenoid valve installed on its lid, accumulated liquid is allowed to discharge automatically through the check valve with tap on the bottom of the filter. Once liquid has been discharged, after a pre-set time (this operation can be timed), the solenoid valve returns to its initial position, thus allowing recreation of a vacuum inside the filter through a small flexible hose connected to the main vacuum piping.
With this arrangement, there will not be any decrease in the level of vacuum for use when the suction exchange will be carried out between the two filters. This exchange will take place when the liquid reaches the level switch float on filter 2 and, from that moment, the operations described above will be repeated.
The filter system is composed of:
- 2 Plexiglas siphon filters with aluminium lids and complete with accessories, with a flow rate of 38 L each
- 2 1" 1/2 gas three-way servo-operated vacuum solenoid valves, item 07 06 13 for item FS 50 BP
  and 2" gas servo-operated vacuum solenoid valves, item 07 08 13 for item FS 60 BP
- 2 ½" gas three-way servo-operated vacuum solenoid valves, item 07 03 13.
- 4 1" 1/2 gas two-way manual valves for vacuum interception, item 13 07 10 for item FS 50 BP
  and 2" gas for vacuum interception, item 13 08 10 for item FS 60 BP
- 2 Manual ½" gas two-way valves, for atmospheric air input, item 13 03 10
- 1 Switchgear enclosed in a special watertight metal box, for single phase electrical voltage Volt 230/ 50 Hz
- 1 Coated profile steel frame to mount all above-described components

The siphon filter system with automatic by-pass is recommended in all those cases in which there is a strong presence of liquid in suction fluids and where machine shut-down for the discharge of liquids suctioned by traditional siphon filters is not allowed.

Technical features

Operating pressure: from 0.5 to 2000 absolute mbar
Fluid temperature: from -5 to +50°C
Level of filtration: 60 µ

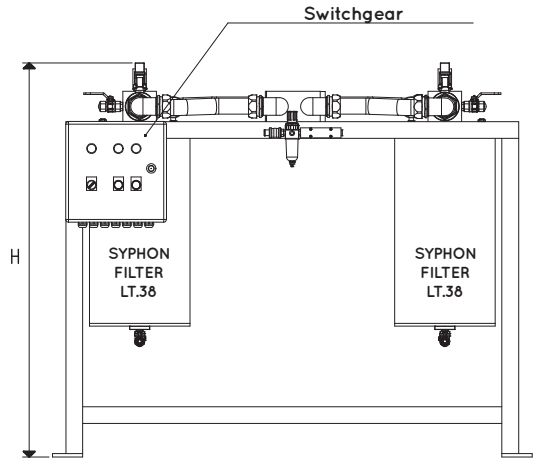

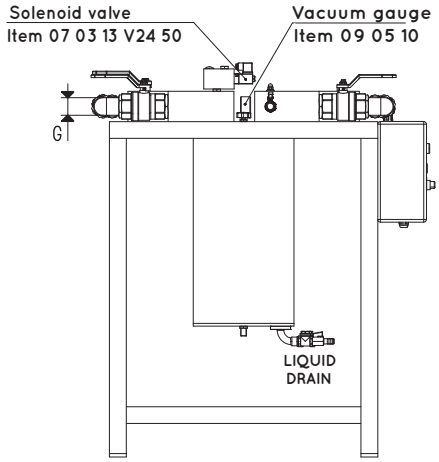

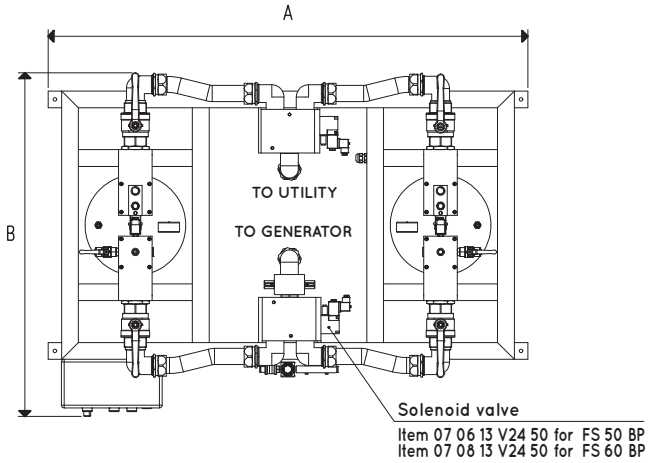

Item	A	B	G	H	Flow rate max m³/h	Capacity L	Cartridge spare part item	Vacuum gauge spare part item	Sealing spare part item	Weight kg
FS 50 BP	1350	1000	G1" 1/2	1180	200	38 x 2	00 FB 45	09 05 10	00 FS 41	130
FS 60 BP	1350	1050	G2"	1200	300	38 x 2	00 FB 45	09 05 10	00 FS 41	136

Transformation ratio: N (newton) = Kg x 9.81 (force of gravity) inch = $\frac{mm}{25.4}$; pounds = $\frac{g}{453.6}$ = $\frac{Kg}{0.4536}$

3D drawings are available on **vuototecnica.net**

3D drawings are available on vuototecnica.net

2FS50BPM1

GAFL01M1

FP SERIES FILTERING CARTRIDGE CONTAINERS WITH COMPRESSION SEALING

The containers of the FP series are suited for the filtering cartridges with compression sealing and are composed of a transparent plastic container and a blue plastic head screwed together with an interposed seal. The number after the item indicates the length in inches of the necessary filtering cartridge.
The cartridge can be chosen in various materials:
pleated paper, pleated polypropylene mesh and stainless steel mesh AISI 304.
The following pages describe the filtering cartridges with compression sealing, with all the indications regarding dimensions, materials and filtering degree of each one of them.

Technical features

Operating pressure: from 0.5 to 9000 absolute mbar
Temperature of suctioned fluid: from -10 to 45°C

3D drawings are available on **vuototecnica.net**

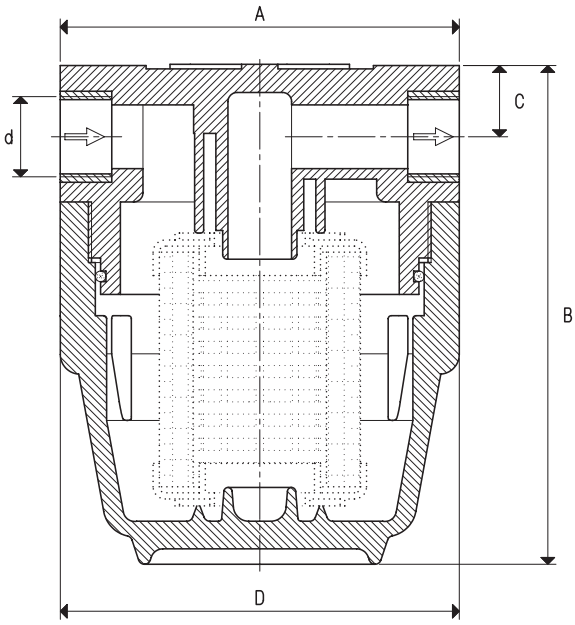

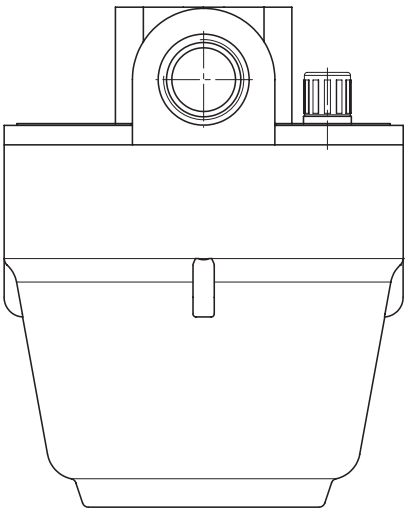

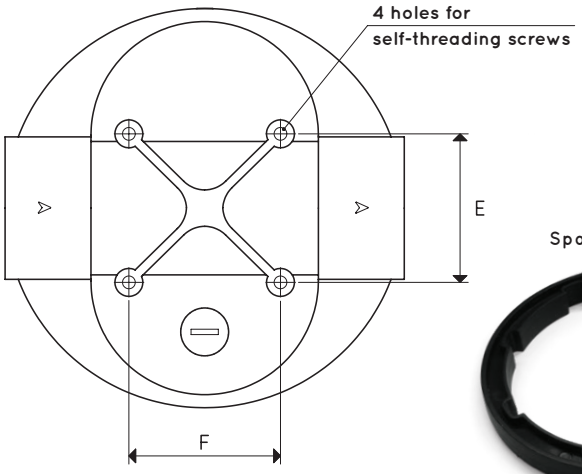

Item	d Ø	A	B	C	D Ø	E	F	Max flow rate m³/h	Cartridge length	For cartridge item	Weight Kg
FP 25/4	G3/4"	130	163	21	130	49	50	70	4"	SP/4 - SS/4 - SA/4	0.84
FP 30/4	G1"	143	169	24	130	50	51	100	4"	SP/4 - SS/4 - SA/4	0.91
FP 25/7	G3/4"	130	250	21	130	49	50	70	7"	SP/7 - SS/7 - SA/7	0.96
FP 30/7	G1"	143	253	24	130	50	51	100	7"	SP/7 - SS/7 - SA/7	1.03
NP	Spanner for tightening the tray										

Note: The filtering cartridge is not an integral part of the filter and, therefore, must be ordered separately.

Transformation ratio: N (newton) = Kg x 9.81 (force of gravity) inch = $\frac{mm}{25.4}$; pounds = $\frac{g}{453.6}$ = $\frac{Kg}{0.4536}$ Adapters for GAS - NPT threading available on page 1.130

FILTERING CARTRIDGES WITH COMPRESSION SEALING

The filtering cartridges described on this page, once installed on their container, are able to retain the impurities and dust contained in the sucked fluid, interfering with the vacuum pump or generator flow rate in a negligible manner.
They are produced with different materials that can be identified with the following abbreviations:

- **Series SP.** Pleated paper filtering cartridge with compression sealing.
- **Series SS.** Pleated polypropylene mesh filtering cartridge with compression sealing.
- **Series SA.** AISI 304 stainless steel mesh filtering cartridge with compression sealing.

The number after the item indicates the length in inches of the filtering cartridge.

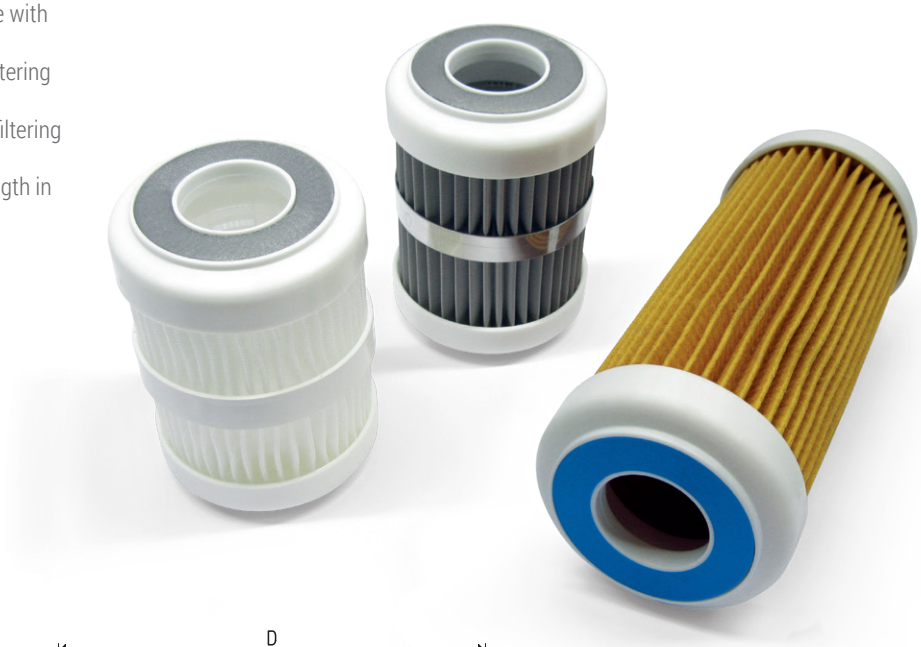

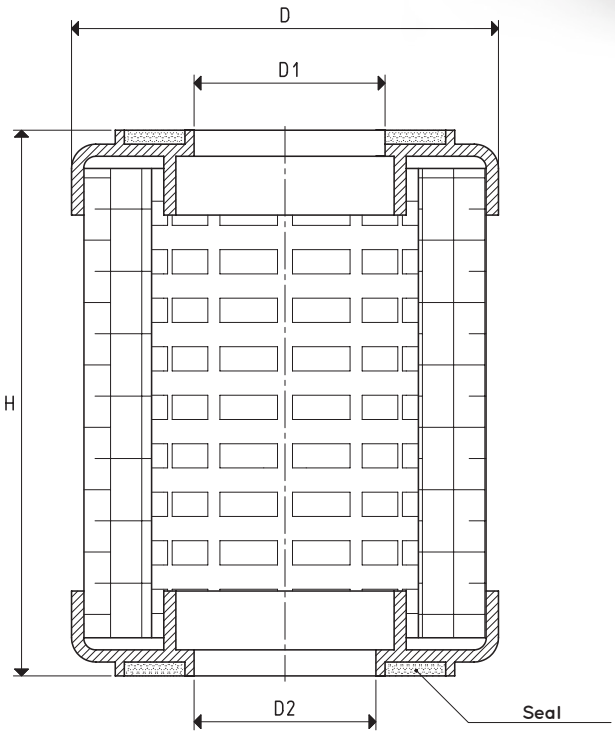

Item	D Ø	D1 Ø	D2 Ø	H	Cartridge length	For container item	Level of filtration micron
SP/4	70	30	30	98	4"	FP 25/4 - FP 30/4	25
SP/7	70	30	30	170	7"	FP 25/7 - FP 30/7	25
SS/4	70	30	30	98	4"	FP 25/4 - FP 30/4	50
SS/7	70	30	30	170	7"	FP 25/7 - FP 30/7	50
SA/4	70	30	30	98	4"	FP 25/4 - FP 30/4	50
SA/7	70	30	30	170	7"	FP 25/7 - FP 30/7	50

Transformation ratio: N (newton) = Kg x 9.81 (force of gravity)

inch = $\frac{mm}{25.4}$; pounds = $\frac{g}{453.6} = \frac{Kg}{0.4536}$

3D drawings are available on **vuototecnica.net**

FM SERIES QUICK COUPLING FILTERING CARTRIDGE CONTAINERS

The containers of the FM series are suited for quick coupling filtering cartridges and are composed of a transparent SAN (Styrene-acrylic nitrile) container and a head with a reinforced polypropylene ring nut, coupled together with an interposed seal.
The number after the item indicates the length in inches of the necessary filtering cartridge.The cartridge can be chosen in various materials: pleated paper, pleated polypropylene mesh and AISI 304 stainless steel mesh. The quick coupling filtering cartridges are described on page 5.28, with all the indications regarding dimensions, materials and filtering degree of each one of them.

Technical features

Operating pressure: from 0.5 to 9000 absolute mbar
Temperature of suctioned fluid: from -10 to 45°C

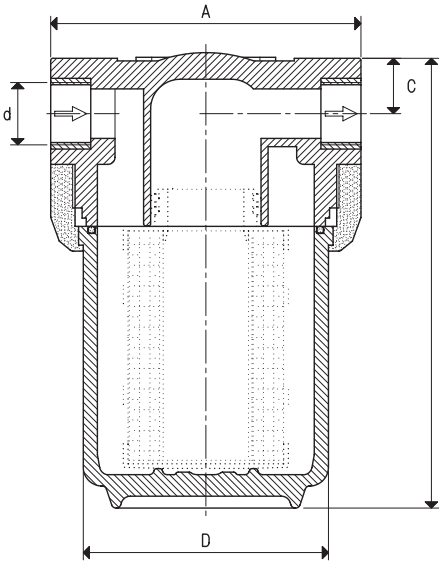

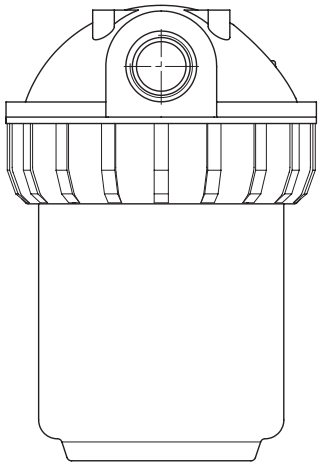

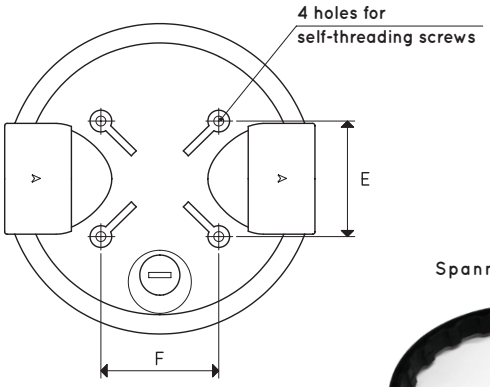

Item	d Ø	A	B	C	D Ø	E	F	Max flow rate m^3/h	Cartridge length	For cartridge item	Weight Kg
FM 20/7	G1/2"	133	241	18	100	48	49	30	7"	RP/7 - RS/7 - RA/7	0.74
FM 25/7	G3/4"	133	241	21	100	49	50	70	7"	RP/7 - RS/7 - RA/7	0.87
FM 30/7	G1"	145	247	24	100	50	51	100	7"	RP/7 - RS/7 - RA/7	0.89
FM 25/10	G3/4"	133	315	21	100	49	50	70	10"	RP/10 - RS/10 - RA/10	0.86
FM 30/10	G1"	145	321	24	100	50	51	100	10"	RP/10 - RS/10 - RA/10	0.93
FM 40/10	G1" 1/4	145	345	35	100	50	51	160	10"	RP/10/57 - RS/10/57 - RA/10/57	1.08
FM 50/10	G1" 1/2	145	345	35	100	50	51	200	10"	RP/10/57 - RS/10/57 - RA/10/57	1.06
FM 60/10	G2"	145	345	35	100	50	51	300	10"	RP/10/57 - RS/10/57 - RA/10/57	1.08
FM 40/20	G1" 1/4	145	600	35	100	50	51	160	20"	RP/20/57 - RS/20/57 - RA/20/57	1.36
FM 50/20	G1" 1/2	145	600	35	100	50	51	200	20"	RP/20/57 - RS/20/57 - RA/20/57	1.34
FM 60/20	G2"	145	600	35	100	50	51	300	20"	RP/20/57 - RS/20/57 - RA/20/57	1.36
NF	Spanner for tightening the ring nut										

Note: The filtering cartridge is not an integral part of the filter and, therefore, must be ordered separately.

Transformation ratio: N (newton) = Kg x 9.81 (force of gravity) inch = $\frac{mm}{25.4}$; pounds = $\frac{g}{453.6}$ = $\frac{Kg}{0.4536}$ Adapters for GAS - NPT threading available on page 1.130

3D drawings are available on vuototecnica.net

FK SERIES QUICK COUPLING FILTERING CARTRIDGE CONTAINERS

The containers of the FK series are suited for quick coupling filtering cartridges and are composed of a transparent PET (Polyethylene terephthalate) container and a head with a brass ring nut coupled together with an interposed seal.
The number after the item indicates the length in inches of the necessary filtering cartridge.
The cartridge can be chosen in various materials: pleated paper, pleated polypropylene mesh and AISI 304 stainless steel mesh. The quick coupling filtering cartridges are described on page 5.28, with all the indications regarding dimensions, materials and filtering degree of each one of them.

Technical features

Operating pressure: from 0.5 to 9000 absolute mbar
Temperature of suctioned fluid: from -10 to 45°C

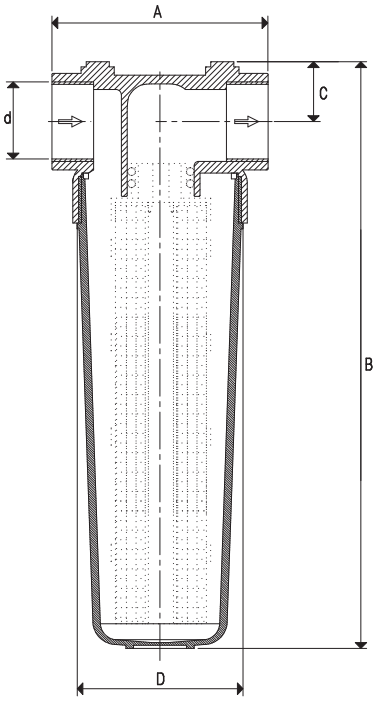

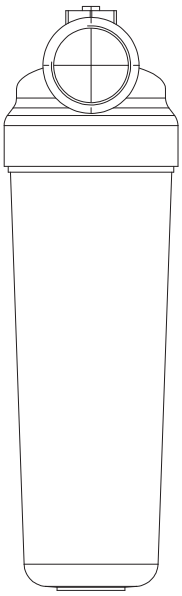

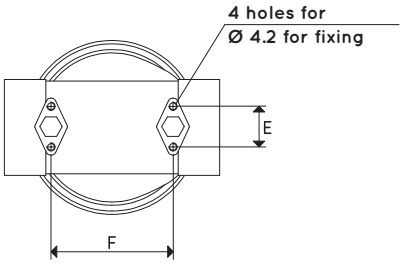

Spanner Item NK

Item	d Ø	A	B	C	D Ø	E	F	Max flow rate m^3/h	Cartridge length	For cartridge item	Weight Kg
FK 25/7	G3/4"	120	265	24	100	25	75	70	7"	RP/7 - RS/7 - RA/7	1.64
FK 30/7	G1"	120	270	27	100	25	75	100	7"	RP/7 - RS/7 - RA/7	1.88
FK 25/10	G3/4"	130	335	24	100	25	75	70	10"	RP/10 - RS/10 - RA/10	2.12
FK 30/10	G1"	130	335	27	100	25	75	100	10"	RP/10 - RS/10 - RA/10	2.35
FK 50/10	G1" 1/2	130	345	30	100	25	75	200	10"	RP/10/57 - RS/10/57 - RA/10/57	2.58
FK 60/10	G2"	130	350	33	100	25	75	300	10"	RP/10/57 - RS/10/57 - RA/10/57	2.69
FK 30/20	G1"	130	540	27	100	25	75	100	20"	RP/20 - RS/20 - RA/20	2.97
FK 50/20	G1" 1/2	130	600	30	100	25	75	200	20"	RP/20/57 - RS/20/57 - RA/20/57	3.20
FK 60/20	G2"	130	600	33	100	25	75	300	20"	RP/20/57 - RS/20/57 - RA/20/57	3.31
NK	Spanner for tightening the tray										

Note: The filtering cartridge is not an integral part of the filter and, therefore, must be ordered separately.

Transformation ratio: N (newton) = Kg x 9.81 (force of gravity) inch = $\frac{mm}{25.4}$; pounds = $\frac{g}{453.6} = \frac{Kg}{0.4536}$ Adapters for GAS - NPT threading available on page 1.130

3D drawings are available on **vuototecnica.net**

QUICK COUPLING FILTERING CARTRIDGES

The filtering cartridges described on this page, once installed on their container, are able to retain the impurities and dust contained in the sucked fluid, interfering with the vacuum pump or generator flow rate in a negligible manner.
They are produced with different materials that can be identified with the following abbreviations:
- **Series RP.** Pleated paper quick coupling filtering cartridge with double O-ring.
- **Series RS.** Pleated polypropylene mesh quick coupling filtering cartridge with double O-ring.
- **Series RA.** AISI 304 stainless steel mesh quick coupling filtering cartridge with double O-ring.

The number after the item indicates the length in inches of the filtering cartridge.

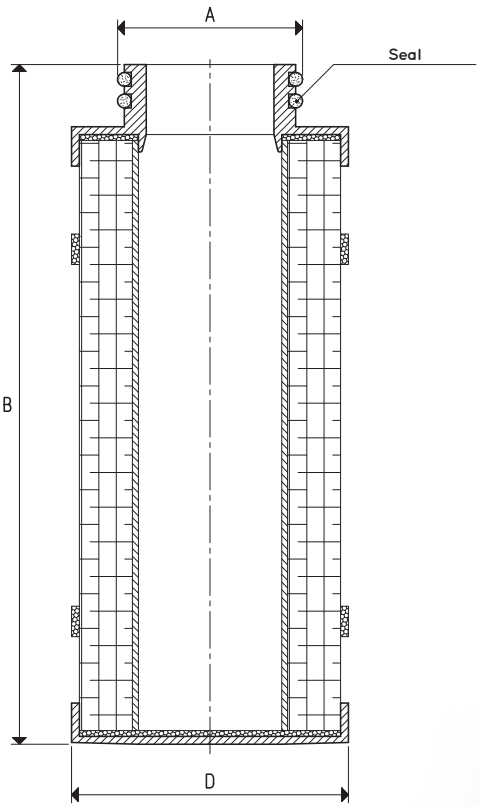

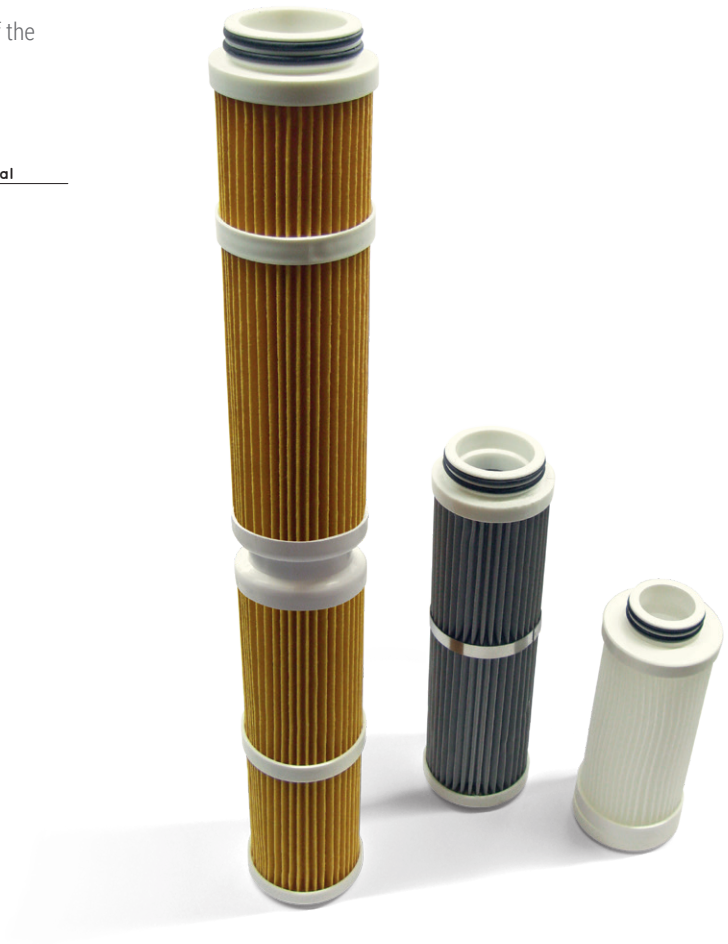

Item	A Ø	B	D Ø	Cartridge length	For container item	Level of filtration micron
RP/7	45	173	70	7"	FM20/7 FM25/7 FM30/7 - FK25/7 FK30/7	25
RP/10	45	250	70	10"	FM25/10 FM30/10 - FK25/10 FK30/10	25
RP/10/57	57	250	70	10"	FM40/10 FM50/10 FM60/10 - FK50/10 FK60/10	25
RP/20	45	505	70	20"	FK30/20	25
RP/20/57	57	505	70	20"	FM40/20 FM50/20 FM60/20 - FK50/20 FK60/20	25
RS/7	45	173	70	7"	FM20/7 FM25/7 FM30/7 - FK25/7 FK30/7	50
RS/10	45	250	70	10"	FM25/10 FM30/10 - FK25/10 FK30/10	50
RS/10/57	57	250	70	10"	FM40/10 FM50/10 FM60/10 - FK50/10 FK60/10	50
RS/20	45	505	70	20"	FK30/20	50
RS/20/57	57	505	70	20"	FM40/20 FM50/20 FM60/20 - FK50/20 FK60/20	50
RA/7	45	173	70	7"	FM20/7 FM25/7 FM30/7 - FK25/7 FK30/7	50
RA/10	45	250	70	10"	FM25/10 FM30/10 - FK25/10 FK30/10	50
RA/10/57	57	250	70	10"	FM40/10 FM50/10 FM60/10 - FK50/10 FK60/10	50
RA/20	45	505	70	20"	FK30/20	50
RA/20/57	57	505	70	20"	FM40/20 FM50/20 FM60/20 - FK50/20 FK60/20	50

Transformation ratio: N (newton) = Kg x 9.81 (force of gravity) inch = $\frac{mm}{25.4}$; pounds = $\frac{g}{453.6} = \frac{Kg}{0.4536}$

3D drawings are available on **vuototecnica.net**